STANDARD SPECIFICATIONS

MECHANICAL

BODY.....GLASS-FILLED POLYESTER
DIAPHRAGM.....SILICONE
TERMINALS.....COPPER ALLOY
CONTACTS.....9370 SILVER ALLOY
.....9371 GOLD ALLOY
ACTUATOR.....STAINLESS STEEL
SPRINGS.....STAINLESS STEEL, BECU
PORT OUTSIDE DIAMETER..... 0.250"
BLEED HOLE..... 0.016
.....CLOSED (OPTIONAL)
FLOW RESTRICTOR.....OPEN, .021, .035

FUNCTIONAL

OPERATING POSITION.....DIAPHRAGM VERTICAL
OPERATING TEMPERATURE.....-40°F to 185°F
.....-40°C to 85°C
PROOF PRESSURE.....2 PSIG (13.8 kPa) MAX
BURST PRESSURE.....3 PSIG (20.7 kPa) MAX

SET POINT TOLERANCES*

IN H2O (Pa) @ AMBIENT.....HYSTERESIS

+/- 0.05(12)
from 0.15(37)DEACT
0.20(50)ACT to 1.00(250)..... 0.04(10) to 0.14(35)

+/- 0.07(17)
from 1.01(251) to 1.50(375) ..... 0.04(10)to 0.20(50)

+/- 0.08(20)
from 1.51(376) to 2.00(498)..... 0.04(10)to 0.20(50)

*CONSULT FACTORY FOR
SET POINTS HIGHER THAN 2.01 (500 Pa)

ELECTRICAL

INITIAL RESISTANCE.....<60 MILLIOHMS
MINIMUM LOAD
RECOMMENDED.....9370: 150mA, 24VAC
.....9371: 15mA, 24VAC
RATINGS.....9370: 1/10 HP, 120-277VAC
5 AMPS RESISTIVE, 125VAC
2.5 AMPS INDUCTIVE, 125VAC
PILOT DUTY: 28VA, 24VAC
125VA, 125VAC
.....9371: 1 AMP RESISTIVE, 24VAC
PILOT DUTY: 0.5 AMP, 24VAC

AGENCY

UL FILE #.....MH16997
CSA FILE #.....LR-50215

BODY FORMS

9370-9371 B

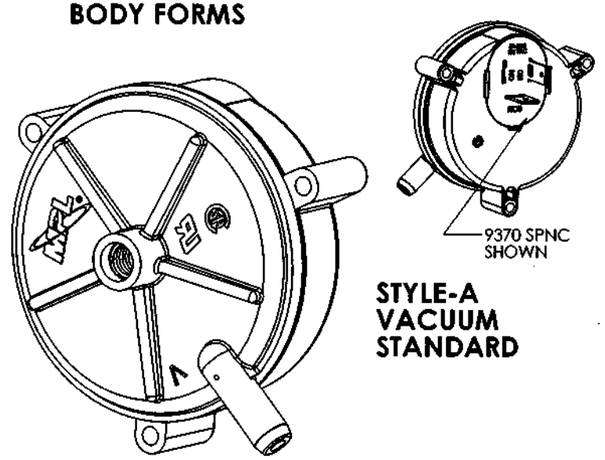

STYLE-A
VACUUM
STANDARD

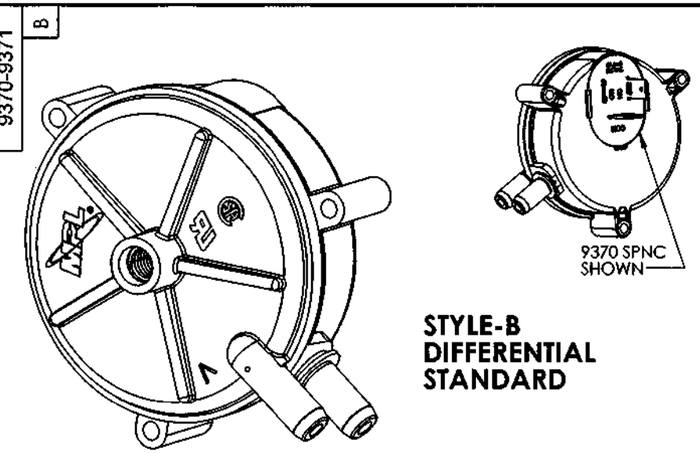

STYLE-B
DIFFERENTIAL
STANDARD

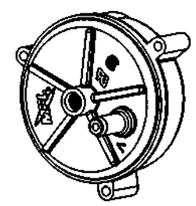

STYLE-A2
VACUUM
OPTIONAL

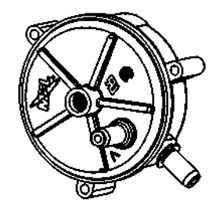

STYLE-B2
DIFFERENTIAL
OPTIONAL

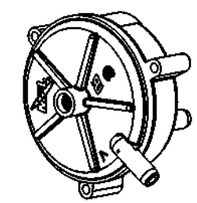

STYLE-B3
DIFFERENTIAL
OPTIONAL

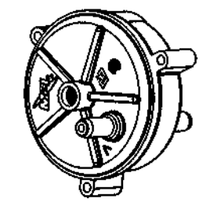

STYLE-B4
DIFFERENTIAL
OPTIONAL

TERMINAL SIZES

.250x.032 STANDARD | .187x.032 OPTIONAL | .187x.020 OPTIONAL

TERMINAL FORMS

9371: NORMALLY OPEN ONLY
9370: NORMALLY OPEN (SPNO)(STD)
.....: NORMALLY CLOSED (SPNC)
.....: DOUBLE THROW (SPDT)

BASIC DIMENSIONS STYLE-A

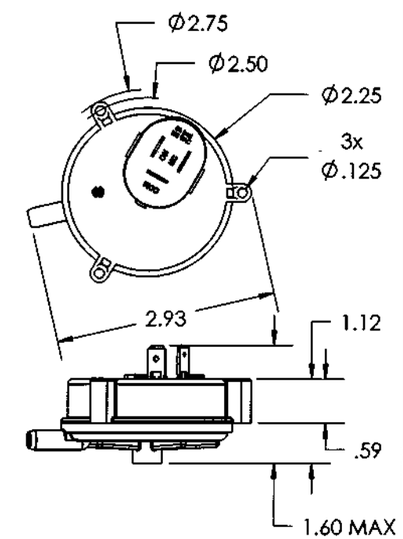

STANDARD BRACKETS

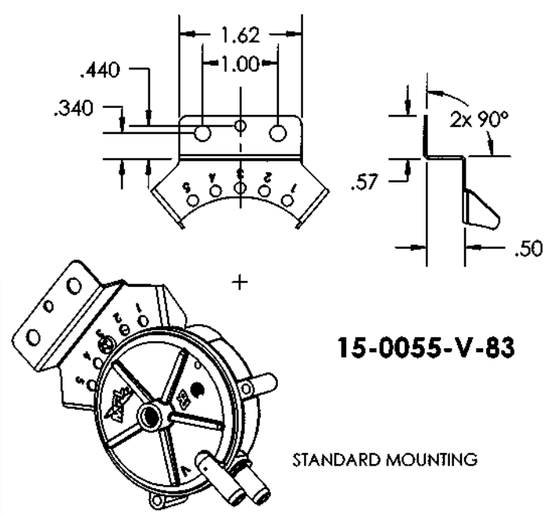

15-0055-V-83

STANDARD MOUNTING

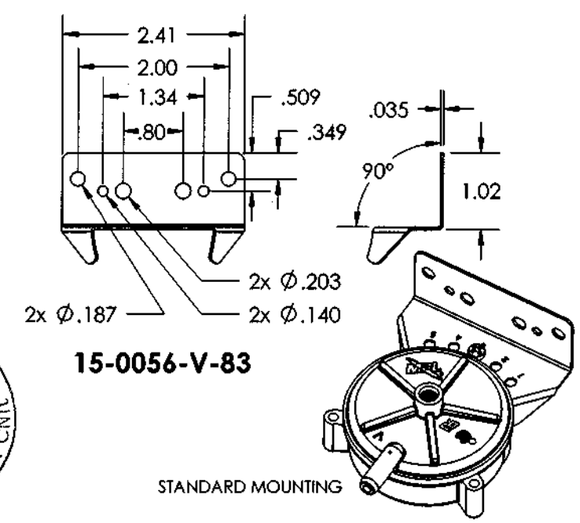

15-0056-V-83

STANDARD MOUNTING

RELEASED
FEB 28 2005
MPL DOCUMENT CNTL

MICRO PNEUMATIC LOGIC INC.
2901 GATEWAY DRIVE
POMPANO BEACH, FLORIDA 33069
PHONE.: 954-973-6166
FAX.....: 954-973-6339

THIS DOCUMENT CONTAINS TRADE SECRET INFORMATION THAT IS PROPRIETARY TO MICRO PNEUMATIC LOGIC, INC. AND/OR TO OUR CUSTOMER. USE OF THIS INFORMATION OR THIS DOCUMENT BEYOND THE PREMISES OF MICRO PNEUMATIC LOGIC INC. IS UNLAWFUL AND PROHIBITED WITHOUT PRIOR WRITTEN AUTHORIZATION.

TOLERANCES: UNLESS OTHERWISE SPECIFIED ALL DIMENSIONS ARE IN INCHES
.X= —
.XX= .30
.XXX= .15
.XXXX= —
ANGLES ± 2°

REV	ECN	DATE	BY	INITIAL		DATE
B	8082	01/18/05	ALR	DRWN	A.RODRIGUEZ	12/21/04
C	8130	02/25/05	ALR	CHCK		2/25/04
				ENGR		2/25/05
				SALES		2/25/05
CAD FILE:	9370-9371C.slddrw			QUAL		2/28/05

MPL www.pressureswitch.com

DOCUMENT NUMBER	REV
9370-9371	C

SCALE: NTS | SHEET: 1 OF 1